Schaltplan 74999-2-setup
(wiring diagram)

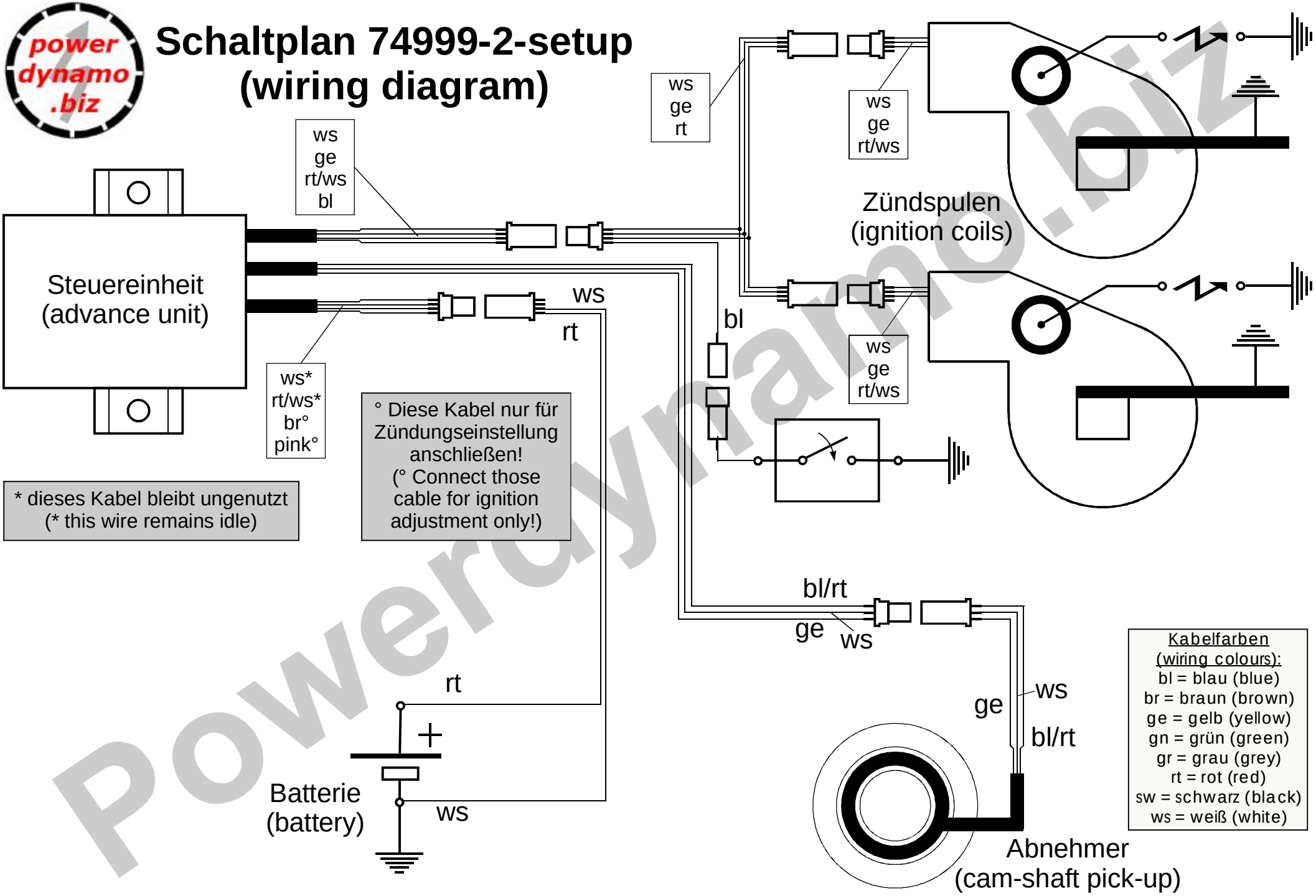

Powerdynamo.biz